Acquisition and Analysis System of the ECG Signal Based on LabVIEW

Lina Zhang[1] Xinhua Jiang[2]

(1 College of Physics and Electronic Information, Inner Mongolia Normal University Hohhot, Inner Mongolia, 010022,China)

E-mail: linanazhang@126.com

(2 College of Computer and Information Engineering, Inner Mongolia Agricultural University Hohhot, Inner Mongolia,010018,China)

E-mail: jiangxhechor@126.com

Abstract**—***In view of characteristics of the ECG signal is very weak and strong background noise, and treated with hardware before enter the enlargement step to avoid noise signal amplification with the useful signal at the same time; QRS wave is basis of analyzing important characteristic of the ECG signal, and uses Matlab biorthogonal spline wavelet function to do wavelet transform with the signal, and detects R wave; A large number signals need tremendous storage space for storing, and thus need to compress the data with Matlab wavelet packet function; LabVIEW acts as the professional development environment of virtual monitoring and control equipment, has good man-machine interface, and easy to setup system and reconstruct system and make custom function.*

Keywords-ECG Signal; Acquisition Circuit; Wavelet Transform; LabVIEW (key words)

I. INTRODUCTION *(HEADING 1)*

Heart disease is one of the most serious diseases to threat to human health, and the cardiovascular disease diagnosis and prevention have become the medical profession the most important issue to face now. ECG signal is one of the earliest medical bio-electricity applying for human, now the medical profession has predicted and diagnosed cardiovascular disease through analyzing and studying ECG signal. Therefore, accurate and complete extraction of ECG signal is the premise of accurate prediction and diagnosis heart attack.

Wavelet transform is local transformation of time and frequency, and realizes the high-resolution local positioning in both time domain and frequency domain, and can reflect signal local characteristics well. So, it can be used for signal detection. Wavelet packet analysis does not only decompose low-frequency part of signal, but also decompose second high-frequency part of signal, that is, it depicts high-frequency part of the signal more detailed. Thus, its signal analysis capability is much stronger.

Compared with traditional instruments, virtual instrument created with LabVIEW software can short development cycle; you can quickly put into use and conserve resources, and the system updates easily.

II. STRUCTURE OF ACQUISITION AND ANALYSIS SYSTEM OF THE ECG SIGNALS BASED ON LABVIEW

ECG signal is one of human bio-electricity, and its Range is only mV magnitude, so it is necessary to further analyze after de-noising and enlarging; The resistance in body is relatively large, so a ECG acquisition circuit of high impedance and high gain and with filtering function is key to obtain accurate ECG signal, and is also the key link of virtual ECG signal analysis system based on LabVIEW. The ECG signal enters the system through the data acquisition card (DAQ), and achieves real-time signal monitoring, signal analysis, compression storage and read history data with software. The design of structure of ECG acquisition and analysis system based on LabVIEW software development platform is shown in Figure 1.

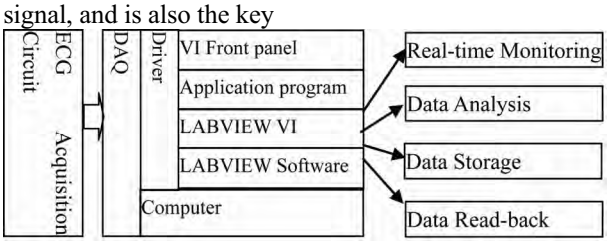

Fig.1. ECG signal acquisition and analysis system structure diagram

Among them, the DAQ uses PCI6070E produced by NI; its maximum sampling rate is 1.25MHz, and has 12-bit A / D conversion precision.

III. ECG SIGNAL ACQUISITION SYSTEM

A. Structure diagram of ECG signal acquisition system

Clinical ECG signal is mainly collected from body surface, this design directly adds the potential of the two limbs to ECG input amplifier using standard Ⅰ wire connected way. The ECG signal tested from the body surface is very weak, the signal range is 10uV ~ 4mV using surface electrodes as sensors, and typical value is 1mV; ECG signal frequency is lower, and contains a large number of DC component. Removing the DC, the main frequency range is 0.05Hz ~ 100Hz, most energy of it concentrates in the 0.05Hz ~ 40Hz. ECG signal is usually mixed with other biological signal, and makes ECG noise background stronger and measurement conditions more complex with interference of 50Hz electromagnetic fields outer of body. The design of a high precision, high stability, high input impedance, high common mode rejection ratio, low noise and strong anti-interference ability ECG signal acquisition system is required in order to get back to Non-distortion ECG signal. ECG acquisition system diagram is shown in Figure 2.

978-1-4244-3864-8/09/$25.00 ©2009 IEEE

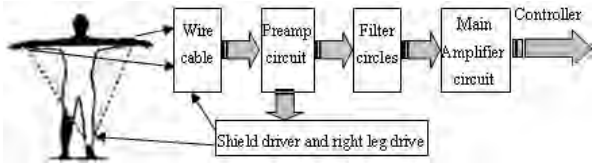

Fig.2. Diagram of ECG signal acquisition system

B. Filter circuit

1) Band-pass filter circuit

The conventional ECG signal frequency range is 0.05Hz~100Hz, and it contains the main energy components of ECG signal in this frequency band. Therefore a band-pass filter is designed in order to make the frequency of 0.05Hz ~ 100Hz of ECG signal pass, and make the signal out of the range significantly attenuate. The band-pass filter circuit is shown in figure 3.

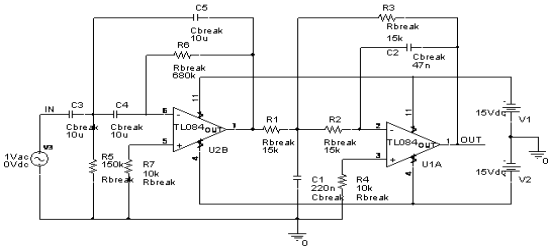

(a)

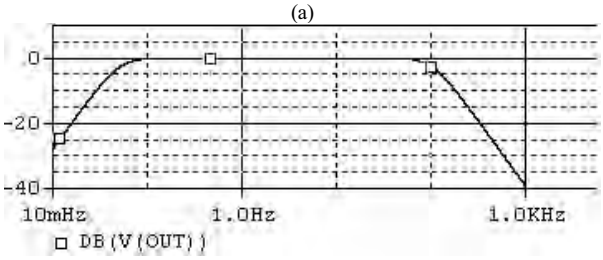

(b)

Fig.3. Band-pass filter and its amplitude-frequency characteristic curve

2) 50Hz filter circuit

In the process of signal detection, 50Hz interference is the main interference of ECG signal, and the frequency exit in the ECG signal frequency band, so the 50Hz band elimination filter is designed to suppress single frequency interference. 50Hz band elimination filter circuit is shown in Figure 4.

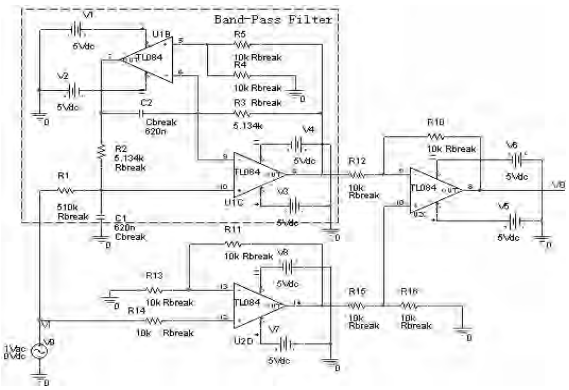

(a)

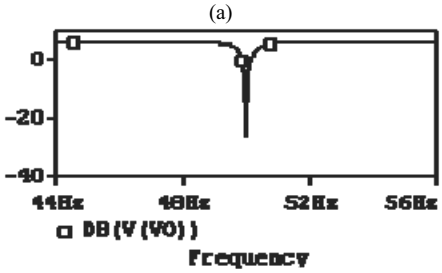

(b)

Fig.4. 50Hz band elimination filter and its amplitude-frequency characteristic curve

In circuit, U1D and R11, R13 and R14 constitute a same phase amplifier with benefit of 2, and U1C and R10, R12, R15 and R16 constitute a differential amplifier (subtraction device) with benefit of 1. The working principle of the circuit is to enlarged the original signal twice, and then subtract 50Hz interference signal with double benefit from band pass filter with dual operational amplifier, and get the signal with double benefits and filter 50Hz frequency component.

3) 35Hz filter circuit

The difference of human electromyography also interferes with the ECG signal in varying degrees, and sometimes submerges ECG signal, so there is a need to be inhibited. Studies show that EMG interference mainly concentrates in about 35Hz, so designs a 35Hz band elimination filter, the circuit is shown in Figure 5.

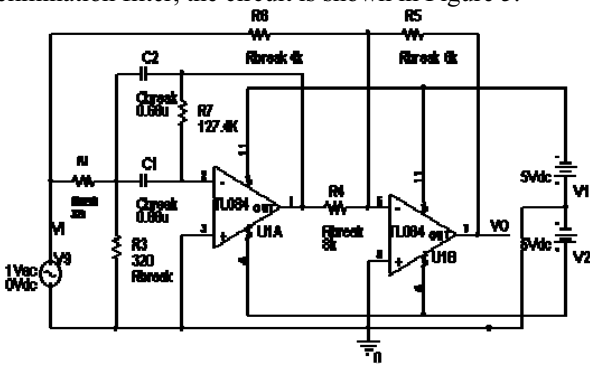

(a)

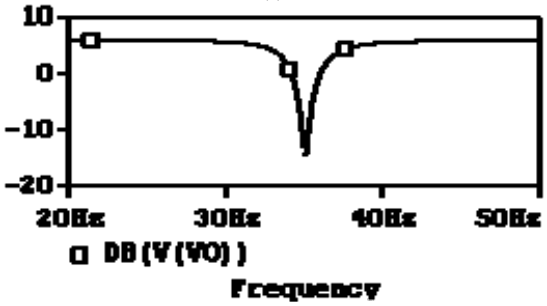

(b)

Fig.5. 35Hz band elimination filter and its amplitude-frequency characteristic curve

IV. ECG SIGNAL ANALYSES AND PROCESSING BASED ON WAVELET TRANSFORM

A. wavelet analysis of QRS wave

In ECG signal, QRS wave is an important characteristic basis to analyze ECG signal, its correct detection is foundation of automatic analysis of ECG signals. Wavelet transform is the local transformation of time and frequency; it achieves high-resolution local positioning both in time domain and frequency domain, and can reflect local characteristics of signals well. The core strategy of application of wavelet transform to QRS wave detect is searching the zero-crossing point between maximum value and minimum value of wavelet transform in a scale or a few scales, and the point corresponds to the location of R wave peak.

ECG signal is non-stationary signal with a lot of singular points, QRS wave is the mutation part of ECG signal, it is easy to detect the relevant information of the QRS wave by wavelet transform modulus maximum value accurately. Use 3-steps spline wavelet as the wavelet mother function, and use the spline wavelet to do binary wavelet transform to ECG signal, the result is shown in Figure 6.

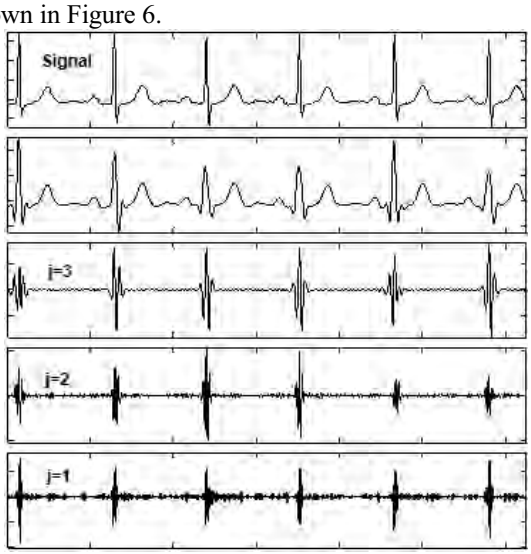

Fig.6. The results of wavelet analysis of ECG signal at all scales

Figure 6 shows original ECG signal and the decomposition of the signal using the biorthogonal spline wavelet bior3.7 at the scale of $j = 1,2,3$, and then reconstructs the signal in all scale. From the figure, we can see that the transform signal in the scale of $j = 3$ corresponding position of the QRS waves has highly visible adjacent modulus maximum value and modulus minimum value, and has zero point between them, that is R-wave peak position.

B. Wavelet packet data compression

Using the default threshold, compresses ECG signal with wavelet packet function: wpdencmp, the result is shown in figure 7.

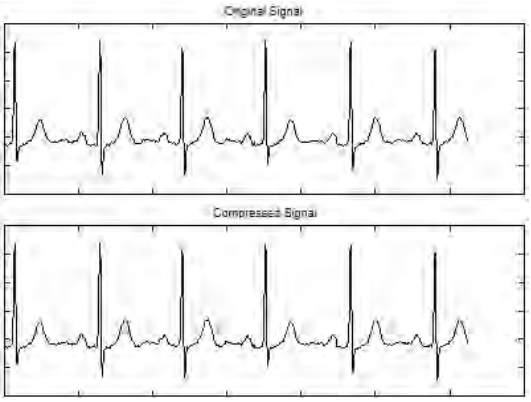

Fig.7. Original and compressed signals

The compressed signal retains all the characteristics of the original signal, but only retains 86.52% energy of the original signal.

ACKNOWLEDGMENT

ECG signal has the characteristics of cardiovascular status as a human bio-electricity, and has great practical value for the prediction and clinic of cardiovascular disease. However, as the body's bio-electric, it is also very weak, can easily be obliterated by the surrounding noise. If the collected ECG signals are enlarged with noise then to de-noising, it is bound to make a useful signal and noise signal at the same time to enlarge, the difficulty of de-noising will be increase, then collected ECG accuracy and reliability will be affected. In this system, the signal amplification prior to the elimination of signal noise, this can significantly improve system reliability and accuracy.

The system design using LabVIEW, which is compatible with Matlab, can improve the system efficiency, while the system updates and improve is convenience.

REFERENCES

[1] Xiaosong Jing, Design of electrocardiogram monitor system based on ARM7, Master's thesis, Inner Mongolia University,2008.7,p10~p21.

[2] Zimei Xie, Electronic Circuit Design, Wuhan, Huazhong University of Science and Technology Publishing House,2006.6,p125~p139.

[3] Yuanbanjunshao, Design t of electronic measurement circuit-filter, Beijing, Science Press, 2006.6, p1~p89.

[4] Leping Zhang, Zhinian Zhu, etc, An identification method of ECG using wavelet transform, Compute Applications and Software, jun 2004,Vol.21,No.6.

[5] Zhenpu Gu, Guang Zhang, Wavelet analysis of electrocardiogram signal, Journal of Hebei University of science and technology, Dec.2006,Vol.27,No.4.

[6] Flying Synopsys Product R & D Center, Matlab6.5 wavelet analysis and application, Publishing House of Electronics Industry, 2003