DESIGN OF MULTILEVEL PSEUDORANDOM SIGNALS FOR SPECIFIED HARMONIC CONTENT

H. A. Barker

Pseudorandom signals have been used in system identification for many years, usually in their binary form, usually for the identification of linear systems and usually because of their correlation properties.[1] Pseudorandom binary signals are unsuitable for the identification of nonlinear systems but pseudorandom ternary signals have been used for the purpose, exploiting their higher-order correlation properties.[2] In contrast, system identification exploiting the harmonic properties of pseudorandom signals has received considerably less attention, although the author has described how these properties can be used in the identification of both linear [3] and nonlinear [4,5] systems.

The principal factor which militates against exploiting the harmonic properties of multilevel pseudorandom signals for system identification is the sheer complexity of the underlying theory and its dependence on the algebra of finite fields.[6] The seminal paper on the generation and correlation properties of these signals by Zierler [7] is difficult enough, and there is no equivalent on harmonic properties.

To some extent, these difficulties can be circumvented by constructing sum and product tables to define the algebraic operations involved.[8] These tables can be constructed for any Galois field $GF(q)$ with q field elements, where q is a power of a prime p, given by

$$q = p^k \tag{1}$$

In these tables, the field elements are taken as the integers modulo-q, and for a prime field, when $k = 1$, the addition and multiplication operations are simply modulo-q arithmetic, as seen in Tables 1a and 1b for the case $q = 7$. For an extension field, when $k > 1$, the field operators cannot be defined in this simple way, and it is necessary to invoke a special procedure for the construction of the tables. Once constructed, however, the tables for an extension field may be used in the same way as those for a prime field, and an example for the case $q = 9$ is given in Tables 2a and 2b.

In what follows, the primitive elements of a field play an important part. These elements are easily identified from the product tables as those for which the powers generate all the nonzero elements of the field. For example, from Tables 1b and 2b the primitive elements of $GF(7)$ are 3 and 5 and those of $GF(9)$ are 3, 4, 6, and 8.

The tables can also be used to generate a sequence $\{s_i\}$ by means of a recurrence relationship

$$\sum_{h=0}^{n} c_h s_{i-h} = 0 \qquad\qquad c_0 c_n \neq 0 \tag{2}$$

as shown in Figure 1. If the characteristic polynomial $f(D)$ given by

$$f(D) = \sum_{h=0}^{n} c_h D^h \tag{3}$$

Professor H. A. Barker is with the Department of Electrical and Electronic Engineering, University College of Swansea, Swansea, Wales, United Kingdom

is primitive, then the sequence $\{s_i\}$ is a maximum-length m-sequence, with period P given by

$$P = q^n - 1 \tag{4}$$

Comprehensive tables of primitive polynomials are available for this purpose.[9, 10]

An important characteristic of an m-sequence, which influences the harmonic content of pseudorandom signals derived from it, is that a period of $P = q^n - 1$ members may be divided into $q - 1$ subperiods of $(q^n - 1)/(q - 1)$ members, and any subperiod may be formed by multiplying the members of the previous subperiod by a primitive element g. That is

$$\left\{s_{i+(q^n-1)/(q-1)}\right\} = \{gs_i\} \tag{5}$$

as shown in Figure 2. Tables 3a and 3b show 3 subperiods of m-sequences in $GF(7)$ and $GF(9)$ for which the primitive element multiplier is 3.

If every element e of the Galois field $GF(q)$ is now mapped into a real number $x(e)$, then the m-sequence $\{s_i\}$ is mapped into a pseudorandom sequence $\{x_i\}$, for which

$$\{x_i\} = \{x(s_i)\} \tag{6}$$

as shown in Figure 2. A period of the pseudorandom sequence $\{x_i\}$ will also have $q - 1$ subperiods, but the relationships between them will depend not only on equation 5 but also on the mapping, so this too influences the harmonic content of the pseudorandom signal $x(t)$ derived from it.

The pseudorandom signals considered here are those derived from the pseudorandom sequence $\{x_i\}$ by using a zero-order-hold to create a stepwise-continuous signal $x(t)$. The harmonic content of the pseudorandom signal $x(t)$ is completely characterized by the frequency response of the zero-order-hold and the discrete Fourier transform $\{X_k\}$ of the pseudorandom sequence $\{x_i\}$, given by

$$X_k = \frac{1}{P}\sum_{i=0}^{P-1} x_i exp(-2\pi jik/P) \tag{7}$$

and it is through the magnitude $\mid X_k \mid$ of the transform sequence member X_k that the presence or absence of the k-th harmonic of the pseudorandom signal $x(t)$ is determined. As the period P is not normally a power of 2, the radix-2 fast Fourier transform cannot normally be used for this transformation, but efficient algorithms are nevertheless available for computing $\{X_k\}$ from $\{x_i\}$.[11, 12, 13]

The transform sequence $\{X_k\}$ also has period $P = q^n - 1$, and a consequence of the subperiodicity of the m-sequence $\{s_i\}$ from which it is derived is that this period may also be divided into subperiods. In the case of the transform sequence, however, a period of $P = q^n - 1$ members divides into $(q^n - 1)/(q - 1)$ subperiods of $q - 1$ members, as shown in Figure 2. With the exception of X_{rP}, which reflects the mean value of the pseudorandom sequence $\{x_i\}$, the magnitudes of corresponding members in the subperiods are equal, that is

$$\{\mid X_{k+q-1} \mid\} = \{\mid X_k \mid\} \qquad k \neq rP \tag{8}$$

and only the phases are different. This means that there are at most $q - 1$ independent harmonics available for allocation in a design, and this is quite restrictive when q is small. Tables 4a and 4b show 2 subperiods of the transform sequence magnitudes of a 7–level and a 9–level pseudorandom sequence.

To proceed further, it is necessary to use a formula derived by the author for the magnitude $\mid X_k \mid$ of the k-th harmonic. This uses the discrete Fourier transform of a sequence with $q-1$ members which are the levels of the pseudorandom sequence $\{x_i\}$ mapped from the nonzero elements of $GF(q)$ generated as the powers of a primitive element g, that is from the sequence

$$x(1) \quad x(g) \quad x(g^2) \ldots \quad x(g^i) \ldots \quad x(g^{q-2})$$

for which the discrete Fourier transform $\{M_k\}$ is given by

$$M_k = \frac{1}{q-1} \sum_{i=0}^{q-2} x(g^i)\, exp(-2\pi jik/(q-1)) \tag{9}$$

The magnitude of the k-harmonic $\mid X_k \mid$ is then obtained as

$$\begin{aligned} &= \frac{q-1}{P} |q^{n-1} M_0 + (q^{n-1}-1)/(q-1)\, x(0)| && k = rP \\ \mid X_k \mid &= \frac{q-1}{P} q^{\frac{n-2}{2}} |M_0 - x(0)| && k = s(q-1) \neq rP \\ &= \frac{q-1}{P} q^{\frac{n-1}{2}} |M_k| && k \neq s(q-1) \end{aligned} \tag{10}$$

Using this result, a mapping may be chosen which eliminates all harmonics that are multiples of a prime number v, that is for which

$$X_{rv} = 0 \qquad all \quad r > 0 \tag{11}$$

If $v \neq q-1$, this implies that

$$M_{rv} = 0 \qquad all \quad r > 0 \tag{12}$$

This equation can always be satisfied if v is a factor of $q-1$, because equation 9 can then be re-arranged as $(q-1)/v$ groups of v terms, so that equation 12 becomes

$$\sum_{i=0}^{(q-1)/v-1} \sum_{h=0}^{v-1} x\left(g^{h(q-1)/v+i}\right) exp(-2\pi jir) = 0 \qquad all \quad r > 0 \tag{13}$$

which is satisfied when

$$\sum_{h=0}^{v-1} x\left(g^{h(q-1)/v+i}\right) = 0 \qquad i = 0, 1, \ldots\ldots (q-1)/v - 1 \tag{14}$$

This condition does not involve $x(0)$, but it involves all the other levels of the pseudorandom sequence $\{x_i\}$, and consequently in equation 9

$$M_0 = 0 \tag{15}$$

Now because $q-1$ and its multiples are themselves multiples of v, it is also necessary to remove the corresponding harmonics, and from equation 10 and 15 this requires that

$$x(0) = 0 \tag{16}$$

and consequently X_0 is also zero, thus accounting for all harmonics.

Using these results it is easy to design a pseudorandom signal so that the k-th harmonic is absent, when k is a multiple of any one of a number of primes $v_1, v_2, \ldots, v_h$. The number of levels, q, of the pseudorandom signal must be chosen so that $q-1$ is a multiple of each of the primes, the level mapped from the zero element of the Galois field $GF(q)$ must be zero and the levels mapped from the nonzero elements of the field must satisfy equation 14 for each of the primes $v_1, v_2, \ldots, v_h$.

For example, suppose that a pseudorandom signal is to be designed in which harmonics which are multiples of 2 and 3 are absent. This requires that the number of levels is at least $2 \times 3 + 1 = 7$, so the pseudorandom signal may be based on an m-sequence in $GF(7)$, for which the sum and product tables are Tables 1a and 1b and one of the primitive elements is 3. Equations 14 and 16 give the conditions

$$\begin{aligned}
&x(0) = 0 \\
&x(3^0) + x(3^3) = x(1) + x(6) = 0 \\
&x(3^1) + x(3^4) = x(3) + x(4) = 0 \\
&x(3^2) + x(3^5) = x(2) + x(5) = 0 \\
&x(3^0) + x(3^2) + x(3^4) = x(1) + x(2) + x(4) = 0 \\
&x(3^1) + x(3^3) + x(3^5) = x(3) + x(6) + x(5) = 0
\end{aligned} \tag{17}$$

with typical solution

$$x(0) = 0 \quad x(1) = 1 \quad x(2) = 2 \quad x(3) = 3 \quad x(4) = -3 \quad x(5) = -2 \quad x(6) = -1 \tag{18}$$

Two subperiods of the transform sequence magnitudes of a 7–level pseudorandom sequence with this mapping are shown in Table 5.

References

1. BRIGGS, P.A.N., HAMMOND, P.H., HUGHES, M.T.G., and PLUMB, G.O. : " Correlation analysis of process dynamics using pseudo-random binary test perturbations ", Proc. Inst. Mech. Engrs., Vol 179, pp 37–51, 1964.

2. BARKER, H.A., and DAVY, R.W. : " Measurement of second-order Volterra kernels using pseudorandom signals ", Int. J. Control, Vol 27, pp 277–291, 1978.

3. BARKER, H.A., and DAVY, R.W. : " System identification using pseudorandom signals and the discrete Fourier transform ", Proc. IEE, Vol 122, pp 305–311, 1975.

4. BARKER, H.A., and DAVY, R.W. : " 2nd-order Volterra kernel measurement using pseudorandom ternary signals and their discrete Fourier transforms ", Proc. IEE, Vol 126, pp 457–460, 1979.

5. BARKER, H.A., and AL-HILAL, M.H. : " Nonlinear system identification using pseudorandom signals with partially orthogonal transforms ", Proc. IFAC Symposium on Identification and System Parameter Estimation, York, 1985, pp 415–420.

6. ALBERT, A.A. : " Fundamental concepts of higher algebra ", University of Chicago Press, Chicago, 1956.

7. ZIERLER, N. : " Linear recurring sequences ", J. Soc. Ind. Math., Vol 7, pp 31–48, 1959.

8. BARKER, H.A. : " Sum and product tables for Galois fields ", Int. J. Math. Educ. Sci. Technol., Vol 17, pp 473–485, 1986.

9. CHURCH, R. : " Tables of irreducible polynomials for the first four prime moduli ", Ann. Math., Vol 36, pp 198–209, 1935.

10. ALANEN, J.D., and KNUTH, D.E. : " Tables of finite fields ", Sankhya, Vol 26, pp 305–328, 1964.

11. SINGLETON, R.C. : " An algorithm for computing the mixed radix fast Fourier transform ", IEEE Trans., Vol AU-17, pp 93–103, 1969.

12. WINOGRAD, S. : " On computing the discrete Fourier transform ", Proc. Nat. Acad. Sci. (U.S.), Vol 73, pp 1005–1006, 1976.

13. SILVERMAN, H.F. : " An introduction to programming the Winograd fast Fourier transform algorithm (WFTA) ", IEEE Trans., Vol. ASSP-25, pp 152–165, 1977.

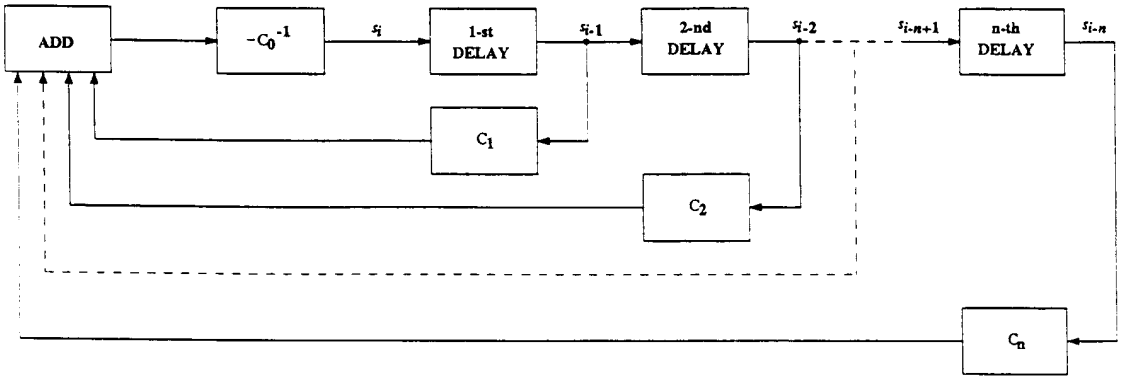

Figure 1 Generation of m-sequence

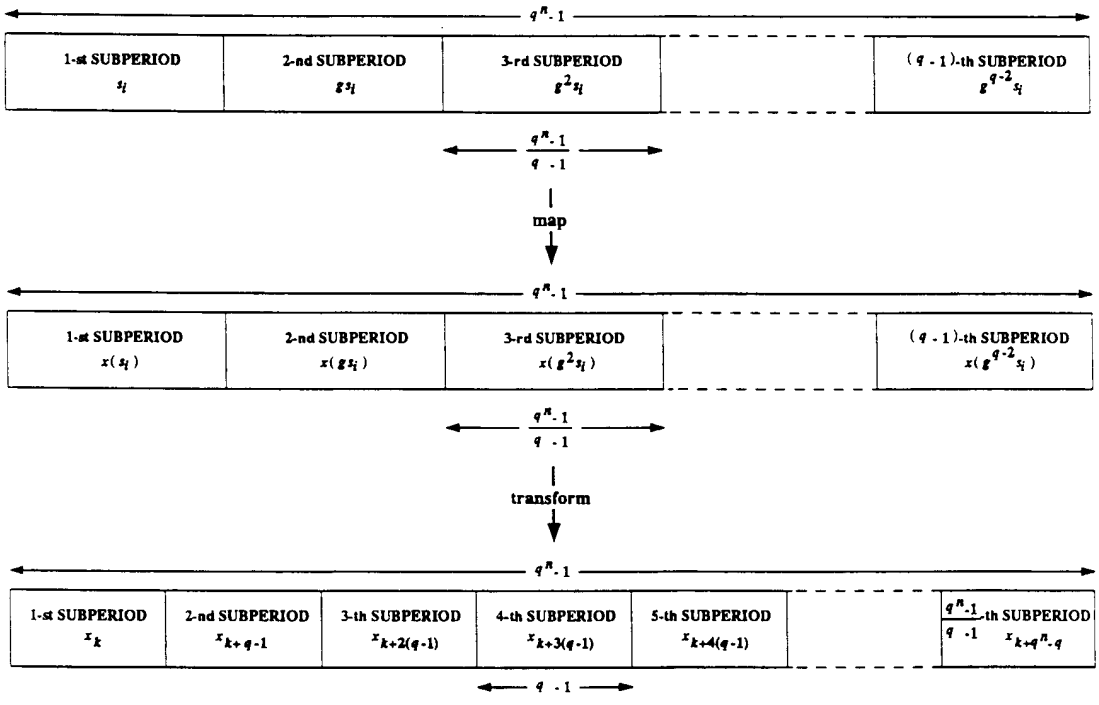

Figure 2 m-sequence, pseudorandom sequence and transform sequence

+	0	1	2	3	4	5	6
0	0	1	2	3	4	5	6
1	1	2	3	4	5	6	0
2	2	3	4	5	6	0	1
3	3	4	5	6	0	1	2
4	4	5	6	0	1	2	3
5	5	6	0	1	2	3	4
6	6	0	1	2	3	4	5

Table 1a Sum Table for GF(7)

x	0	1	2	3	4	5	6
0	0	0	0	0	0	0	0
1	0	1	2	3	4	5	6
2	0	2	4	6	1	3	5
3	0	3	6	2	5	1	4
4	0	4	1	5	2	6	3
5	0	5	3	1	6	4	2
6	0	6	5	4	3	2	1

Table 1b Product Table for GF(7)

+	0	1	2	3	4	5	6	7	8
0	0	1	2	3	4	5	6	7	8
1	1	2	0	4	5	3	7	8	6
2	2	0	1	5	3	4	8	6	7
3	3	4	5	6	7	8	0	1	2
4	4	5	3	7	8	6	1	2	0
5	5	3	4	8	6	7	2	0	1
6	6	7	8	0	1	2	3	4	5
7	7	8	6	1	2	0	4	5	3
8	8	6	7	2	0	1	5	3	4

Table 2a Sum Table for GF(9)

x	0	1	2	3	4	5	6	7	8
0	0	0	0	0	0	0	0	0	0
1	0	1	2	3	4	5	6	7	8
2	0	2	1	6	8	7	3	5	4
3	0	3	6	7	1	4	5	8	2
4	0	4	8	1	5	6	2	3	7
5	0	5	7	4	6	2	8	1	3
6	0	6	3	5	2	8	7	4	1
7	0	7	5	8	3	1	4	2	6
8	0	8	4	2	7	3	1	6	5

Table 2b Product Table for GF(9)

1 3 1 4 0 2 5 3	3 2 3 5 0 6 1 2	2 6 2 1 0 4 3 6

Table 3a Three subperiods of an m-sequence in $GF(7)$

1 7 7 5 3 0 5 2 3 7	3 8 8 4 7 0 4 6 7 8	7 2 2 1 8 0 1 5 8 2

Table 3b Three subperiods of an m-sequence in $GF(9)$

.12 .75 .29 .33 .29 .75	.12 .75 .29 .33 .29 .75

Table 4a Two subperiods of transform magnitudes of a 7–level pseudorandom sequence

.10 .44 .41 .49 .08 .49 .41 .44	.10 .44 .41 .49 .08 .49 .41 .44

Table 4b Two subperiods of transform magnitudes of a 9–level pseudorandom sequence

HARMONIC	0	1	2	3	4	5	6	7	8	9	10	11
MAGNITUDE	0	.5	0	0	0	.5	0	.5	0	0	0	.5

Table 5 Two subperiods of transform magnitudes of a 7–level pseudorandom sequence with harmonic multiples of 2 and 3 suppressed